Electroweak Instantons, Axions and the Cosmological Constant

Work with R. Pisarski and V. Skokov

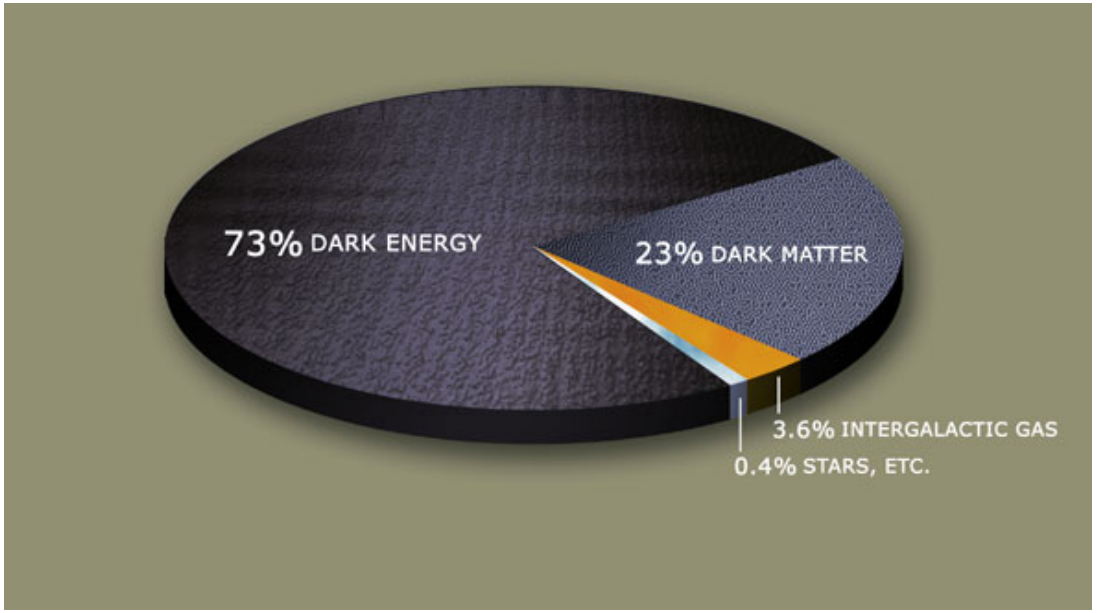

Related to works of

Shaposhnikov:

νMSM

Shaposhnikov and Wetterich:

126 Gev Higgs Prediction

Yanagida et al:
SUSY Weak Axion

Theoretical Question: Is there a natural way to get the dark energy?

$$\epsilon_{DE} \sim 10^{-122} M_{pl}^4$$

Maybe:
If there is no new electroweak physics beyond the Higgs and right handed neutrinos up the the a Planck mass energy scale

RIKEN BNL Research Center

RIKEN

RUPRECHT-KARLS-UNIVERSITÄT HEIDELBERG

HUAZHONG UNIVERSITY

Instantons and the Theta Angle in Electroweak Theory

Suppose we insert into electroweak theory:

$$\theta \ \frac{\alpha}{8\pi} \int d^4x \ tr(FF^d)$$

$$F^d_{\mu\nu} = \frac{1}{2}\epsilon_{\mu\nu\lambda\sigma}F^{\lambda\sigma}$$

The topological charge is

$$N = \frac{\alpha}{8\pi} = \int d^4x \ tr(FF^d) = \int d^4x \ \partial_\mu K^\mu$$

Corresponding to instanton solutions that carry integer values of N

Physics of the Anomaly:

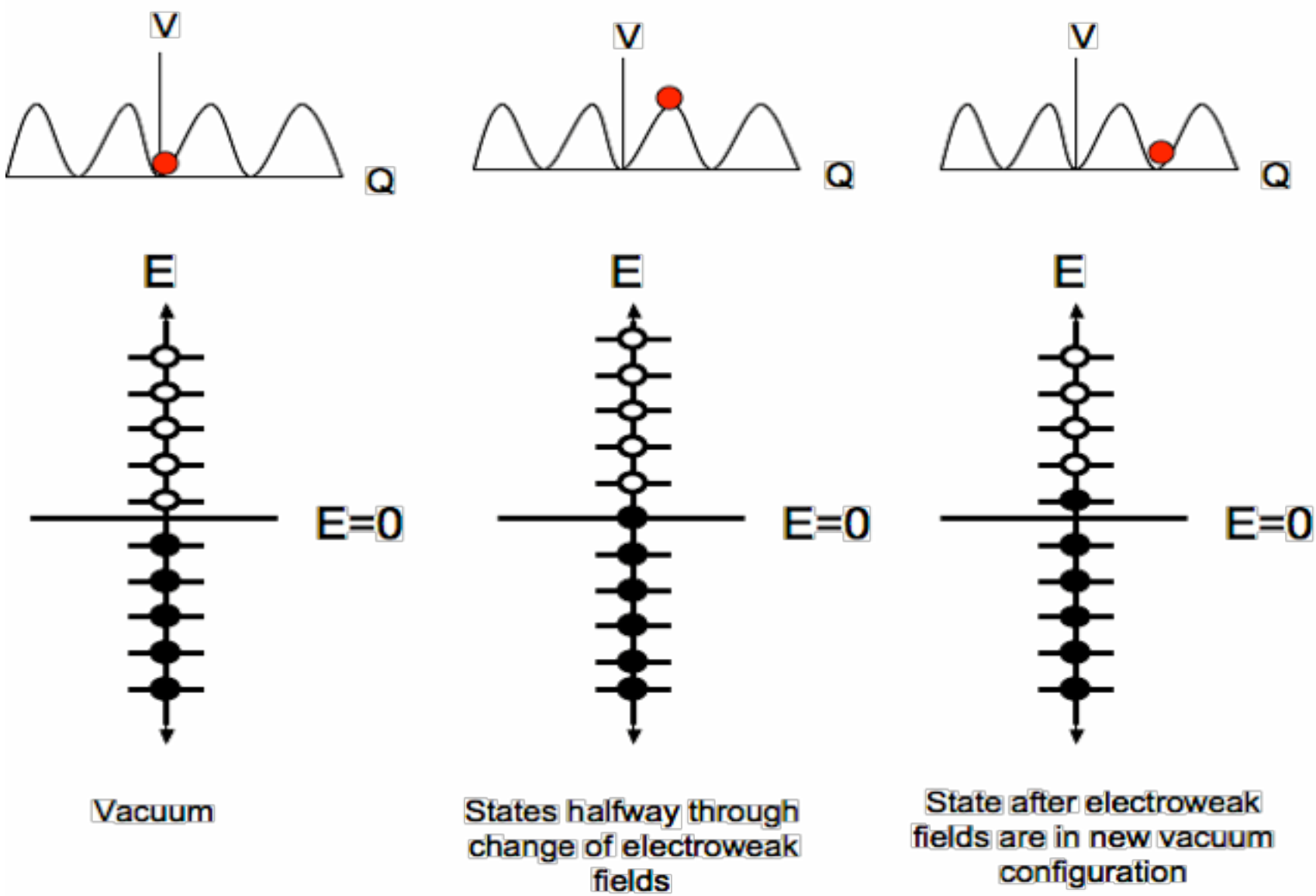

Naively, it appears that theta generates P and CP violation but not true entirely within the standard model

The B+L anomaly requires that

$$\partial_\mu J^\mu_{B+L} = N_f N$$

Every instanton process is accompanied by fermion zero modes corresponding to B+L violation

If there is a phase, then in each B+L violating process there is a factor

$$e^{iN\theta}$$

In the standard model, there is no explicit violation of B+L:
There can be no interference between amplitudes with different N
The phases cancels out in squared matrix elements
The theta angle is of no physical significance

A physical significance of the theta angle requires explicit B+L violation

But explicit B+L violation occurs at some very high energy scale!

How can it be relevant for low energy scales?

An instanton process involves integrations over scale sizes of instantons

$$S_{instanton} \sim V_4 \int \frac{d\rho}{\rho^5}\, e^{-2\pi/\alpha_W(\rho)}$$

Anselm and Johanssen

$$\frac{2\pi}{\alpha(\rho)} = \frac{2\pi}{\alpha(\rho_0)} + (22/3 - N_f/3 - N_h/6) ln(\rho_o/\rho)$$

For EW theory:

$$\frac{2\pi}{\alpha(\rho)} = \frac{2\pi}{\alpha(\rho_0)} + \frac{19}{6} ln(\rho_o/\rho)$$

Integration is dominated by the UV!
For SUSY, even more dominated by the UV!

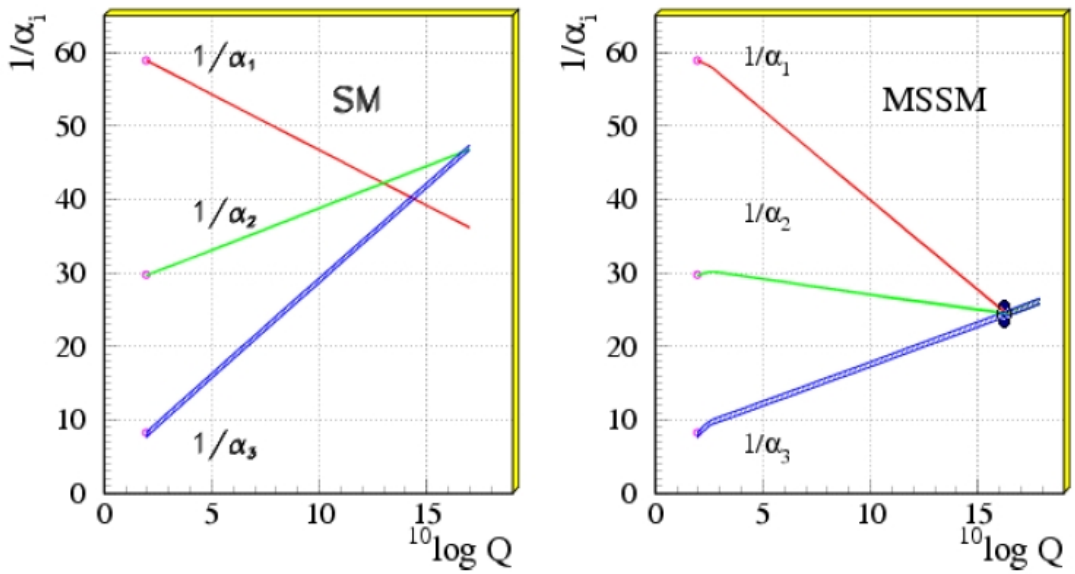

For an amplitude with B+L violation at fixed low momentum of external lines, Integrations are convergent and dominated by EW scale

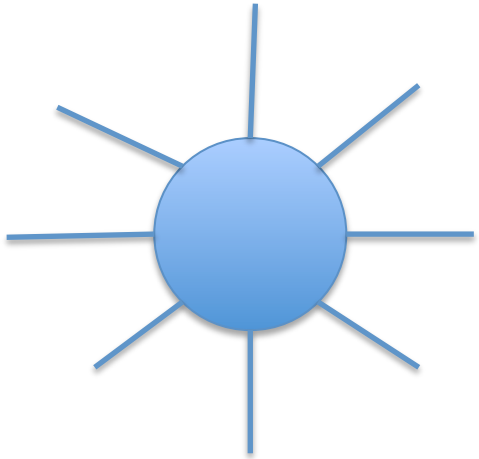

To get a vacuum to vacuum amplitude, for a theta angle dependence, we must have explicit B+L violation

$$\frac{1}{M^2} q_L q_L q_L l_L$$

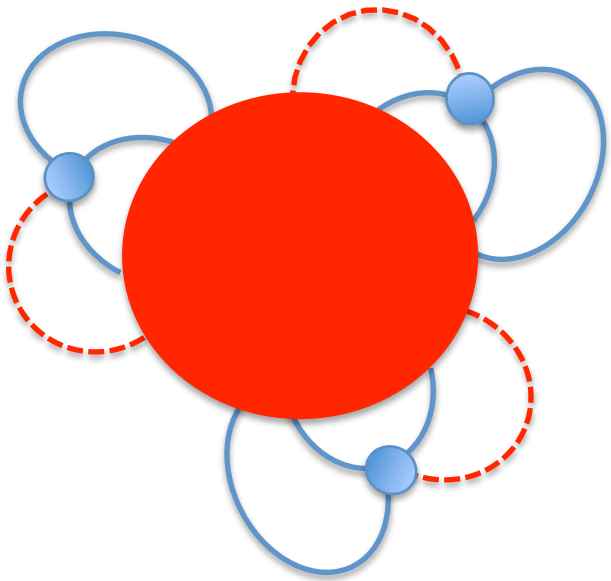

$$\sim V_4 \int \frac{d\rho}{\rho^5} e^{-2\pi/\alpha(\rho)} \frac{1}{\rho^6 M^6}$$

Sensitive to UV scale:

$$\sim V_4 \; \Lambda^4 e^{-2\pi/\alpha(\Lambda)}$$

$$S_{Instanton} \sim V_4 \left(\frac{2\pi}{\alpha_W(\Lambda)} \right)^4 \Lambda^4 cos(N_f \theta) e^{-2\pi/\alpha_W(\Lambda)}$$

If we take

$$\Lambda = M_{pl} \qquad \theta \sim 0(1)$$

$$\left(\frac{2\pi}{\alpha_W(M_{pl})} \right)^4 M_{pl}^4 \; e^{-2\pi/\alpha_W(M_{pl})} \sim 10^{-122} M_{pl}^4 \sim \epsilon_{DE}$$

(Checked using two loop beta function and mean experimental extraction of weak coupling)

How to make the instanton contribution dark energy?

Promote theta to an axion field

B+L rotation is a Goldstone symmetry associated with breaking the B+L symmetry

Goldstone symmetry implies in the absence of instantons, the potential is flat

Instantons induce a mass term

$$\frac{1}{M^2} qqql \rightarrow \frac{1}{M^3} aqqql \qquad a = \rho e^{i\theta}$$

$$\theta^2 \epsilon_{DE} \rightarrow M_{axion}^2 \sim \epsilon_{DE}/f_A^2$$

Almost all scales:
Size of universe to Planck length
~ 60 orders of magnitude

If we take

$$f_A \sim M_{pl}$$

Einstein's equation give

$$M_A \sim 1/R_{universe}$$

Electroweak axion is just beginning to roll!

For such a large axion VEV, there appear no obvious astrophysics problems

Such EW axions were considered in SUSY by Yanagida et. Al.

$$\alpha_{SUSY}(M_{GUT}) \sim 2\alpha_{MSM}(M_{pl})$$

Naïve instanton rate is very large. Extra symmetries make for a HUGE suppression of pre-factor, and a reasonable value of dark energy may be obtained

Note: Cosmological constant problem is not really solved in our considerations, since there is the energy of the ultimate vacuum, far in the future, that must be zeroed. We are computing the energy difference between the energy density now and the energy density of this vacuum in the very very far future

Wetterich and Shaposhnikov predicted that if we require a reasonable electroweak theory to the Planck scale, we get a Higgs of mass 126 GeV

Shaposhnikov argues that in the νMSM, one can have acceptable dark matter, baryonic matter and inflation